MMIRS CONCEPT OVERVIEW

GEORGE NYSTROM

July 6, 2004

DISCUSSION TOPICS

- **DESIGN APPROACH**
- **SPECIFICATIONS**
- **MAJOR COMPONENTS**
- **OPTICAL DESIGN**
- **MOS SECTION**
- **CAMERA SECTION**
- **VACUUM SYSTEM**
- **THERMAL SYSTEM**

MMIRS DESIGN FLOW

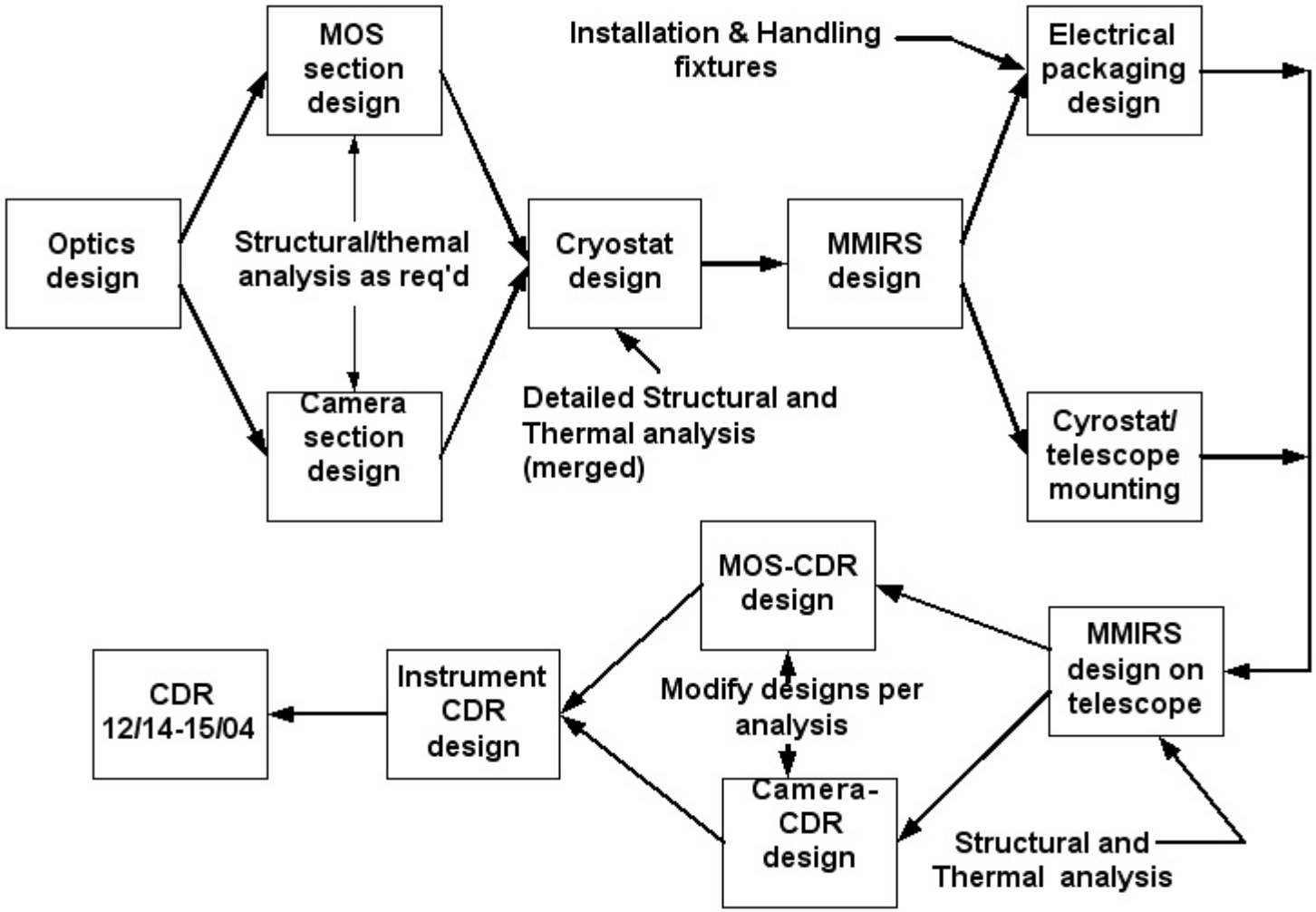

MMIRS DESIGN FLOW

- THE MMIRS INSTRUMENT HAS BEEN DIVIDED INTO TWO MAJOR COMPONENTS:
  - CRYOSTAT (CS)
  - TELESCOPE COMPONENT (TC)
- THE CS HAS BEEN DESIGNED USING ENGINEERNG ANALYSIS AND LIMITED MODELING
- THE TC WILL BE DESIGNED AFTER THE PDR REVIEW WHILE DETAILED THERMAL AND STRUCTURAL MODELING IS BEING PERFORMED ON THE CRYOSTAT.
- THE CS ANALYSES WILL THEN BE INCORPORATED INTO THE CRYOSTAT WITH CHANGES BEING MADE AS REQUIRED.
- DETAILED ANALYSIS AND MODELING WILL THEN BEGIN ON THE TC DESIGN CONCEPT
- THE TC ANALYSIS WILL THEN BE INCORPORATED LEADING TO THE CDR DESIGN REVIEW.

MMIRS CONCEPT

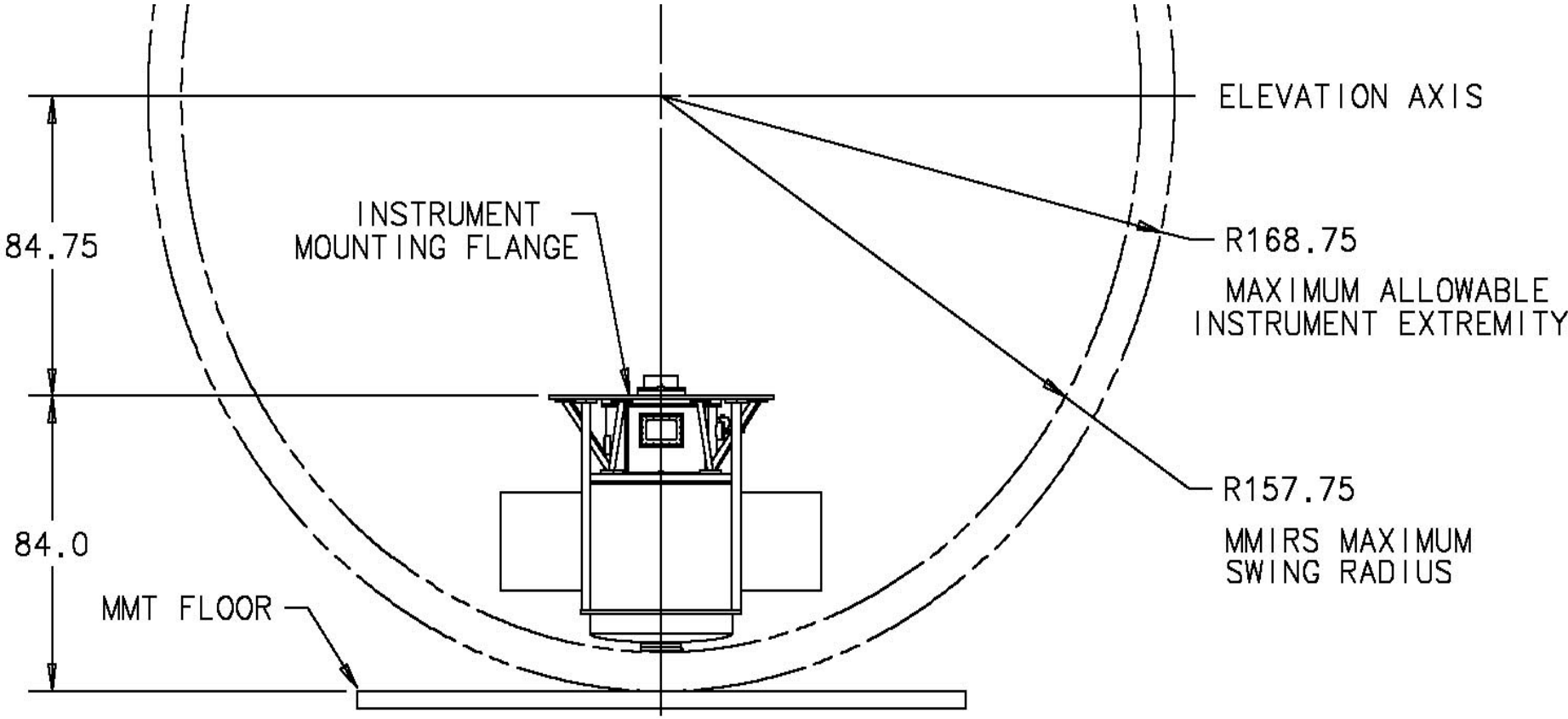

MMIRS TELESCOPE ENVELOPES

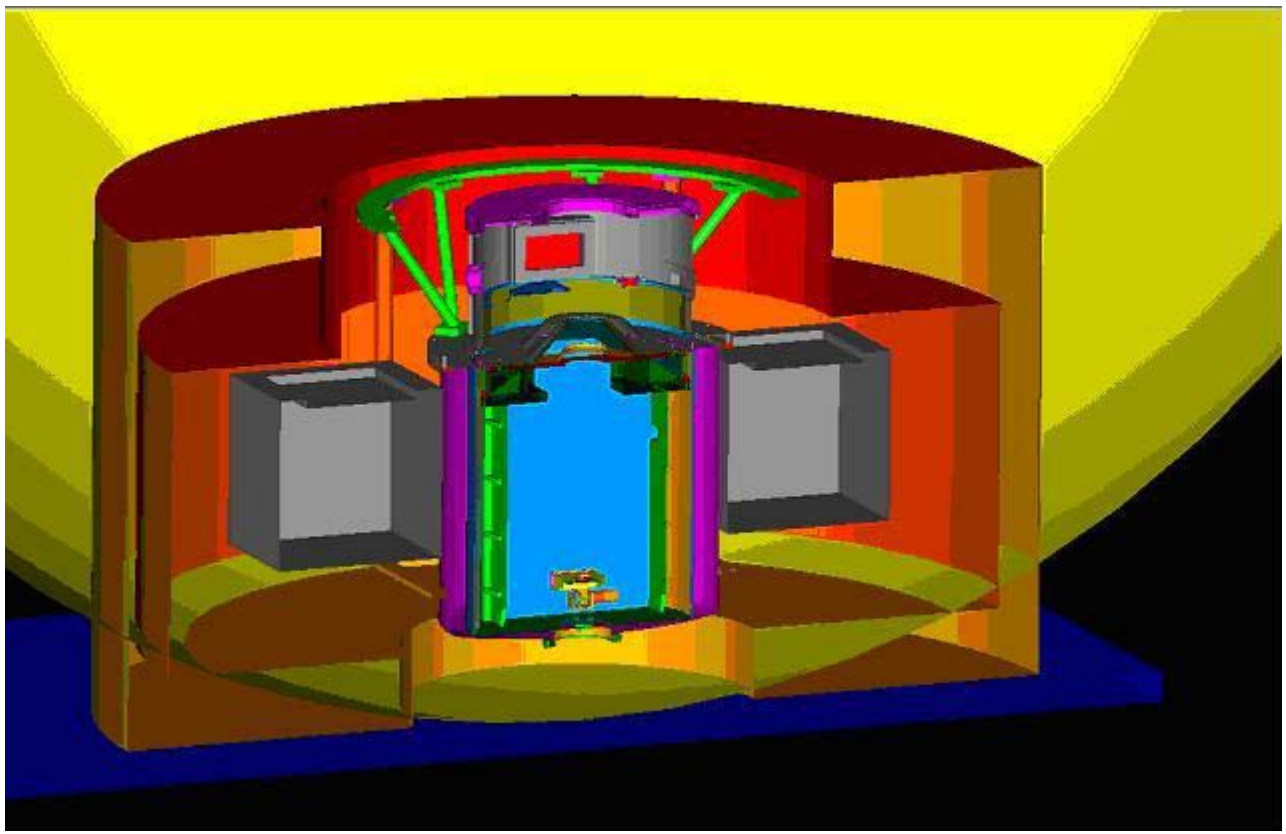

MMIRS SPECIFICATIONS

- FUNCTIONAL AND PERFORMANCE REQUIREMENTS -- S-MMIRS 200
- MOS SECTION -- S-MMIRS-201
- CRYOGENIC STRESS RELIEVING AND MATERIAL CONDITIONING -- S-MMIRS-202
- CAMERA SECTION – S-MMIRS-203
- GUIDER AND WAVE FRONT SENSOR -- S-MMIRS-204
- OPTICAL LAYOUT -- MMIRS-100
  - OPTICAL SPACINGS, SHEET 1
  - OPTICAL POSITIONING TOLERANCES, SHEET 2
  - BAFFLING, SHEET 3

MAJOR COMPONENTS

- CRYOSTAT
  - MOS SECTION
  - CAMERA SECTION
- TELESCOPE COMPONENTS
  - CYROSTAT MOUNT
  - ELECTRONICS/HANDLING FRAME
    - CYROSTAT RACK
    - DETECTOR RACK
    - TRI-SCROLL ROUGHING PUMP
  - INSTALLATION & HANDLING EQUIPMENT AT TELESCOPE
  - SHIPPING CONTAINERS

CRYOSTAT DESIGN CONCEPT

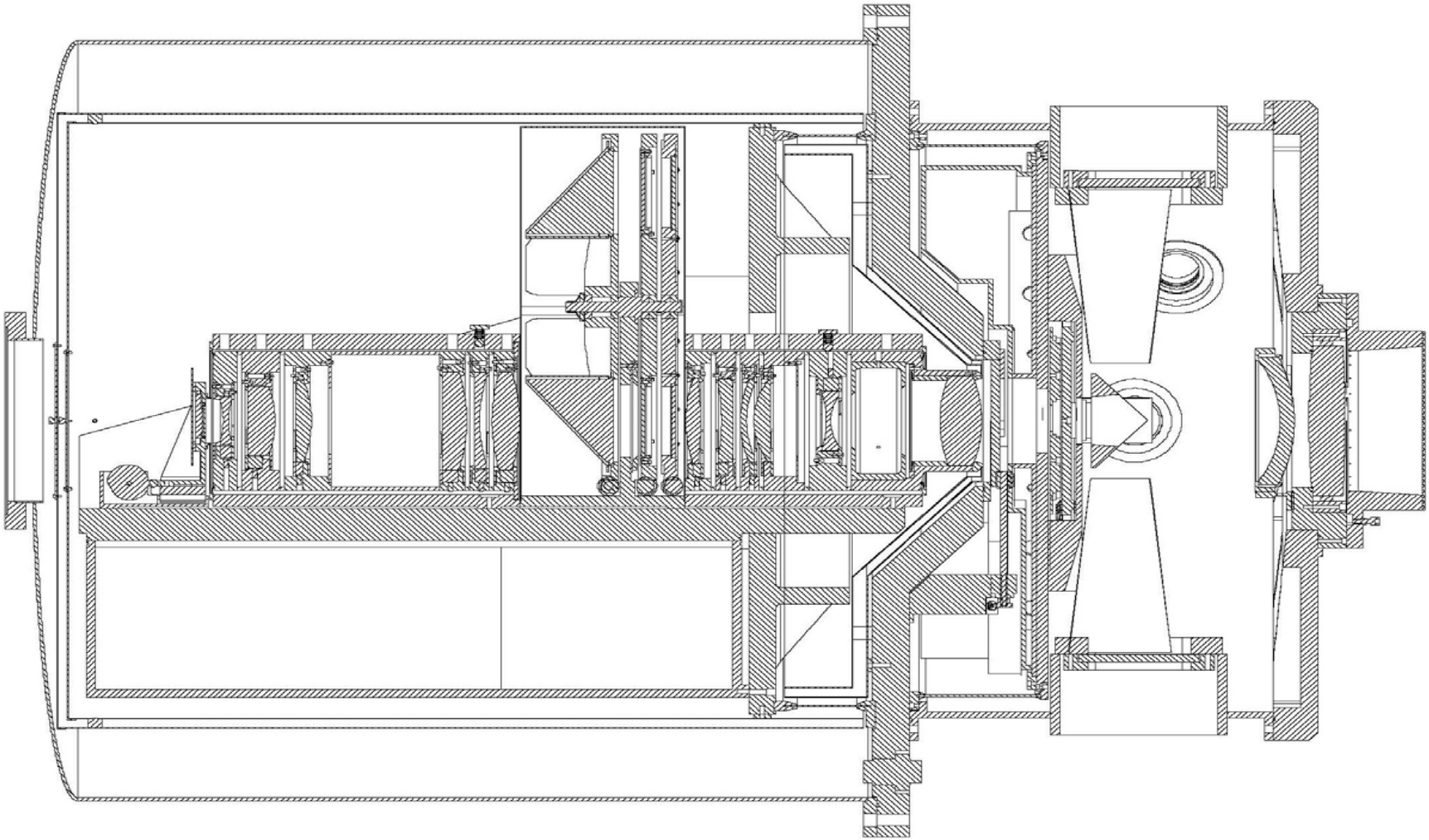

CRYOSTAT-MOS COMPONENTS

- **MOS SECTION COMPONENTS**
  - **2 ELEMENT CORRECTOR LENS SYSTEM**
  - **GUIDER—WAVE FRONT SENSOR (2 SYSTEMS)**
  - **DEKKER WHEEL (4 POSITIONS - IMAGING, LONG SLIT, MOS SLIT & BLANKING)**
  - **MOS (SLIT) WHEEL (16 POSITIONS - 8 MOS & 7 LONG SLITS AND ONE IMAGING POSITION)**
  - **THERMAL SYSTEM**
    - **LN2 SYSTEM**
    - **MEASUREMENT SYSTEM**
  - **VACUUM SYSTEM**
    - **TURBO PUMP FOR HIGH VACUUM**
    - **TRI-SCROLL FOR LOW VACUUM (ROUGHING PUMP)**
    - **MEASUREMENT-PFEIFFER (ATM-1X10^{-9})**
    - **GETTERS**

CRYOSTAT-CAMERA COMPONENTS

- LENS MOUNTS
  - 12 LENS CELLS INCORPORATED INTO TWO MOUNTS
- GRISM ASSEMBLY
  - 2 FILTER WHEELS (6 POSITIONS – 5 FILTERS & OPEN / WHEEL)
  - FIXED LYOT STOP
  - GRISM WHEEL (6 POSITIONS – 5 GRISMS & OPEN W/BALANCE WEIGHT)
- DETECTOR ASSEMBLY (CAM DRIVEN FOCUS SLIDE WITH LVDT READOUT)
- THERMAL SYSTEM
  - LN2 RESERVOIR, FILL AND VENT LINES
  - MEASUREMENT SYSTEM
- VACUUM SYSTEM COMPONENTS
  - VESSEL WITH BLANKED OFF PUMPING PORT
  - ISOLATION VALVE
  - PRESSURE SENSOR
  - GETTERS
  - MEASUREMENT-PFEIFFER (ATM-1X10^{-9})

Detailed Discussions

- **Vacuum System**
- **Telescope components**

VACUUM SYSTEM

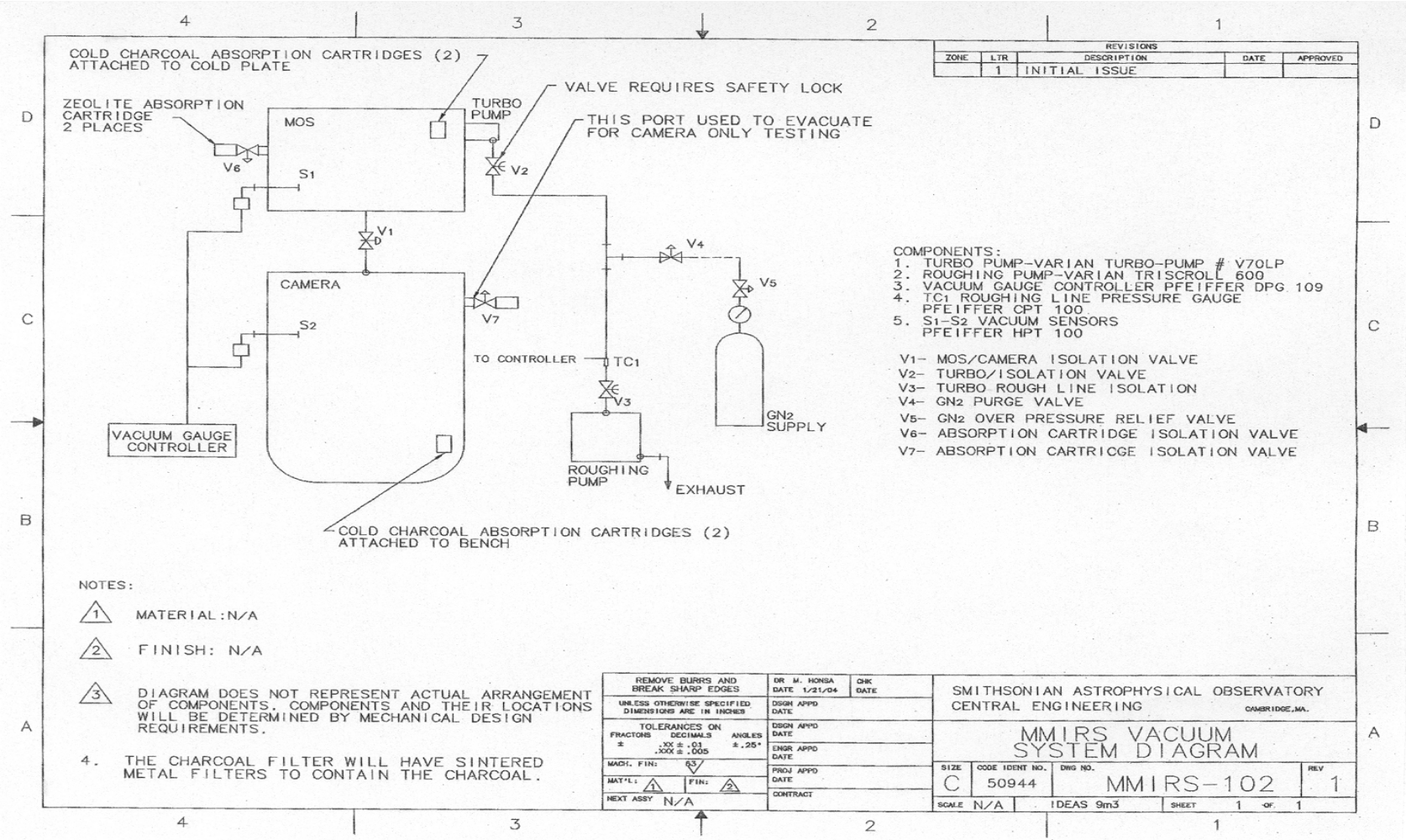

VACUUM SYSTEM REQUIREMENTS

- **MOS PUMP DOWN TIME: <30 MINUTES TO 1 X 10^{3} TORR**
- **MMIRS PUMPDOWN TIME: <420 minutes to 1 x 10^{-4} TORR**
- **SYSTEM LEAK RATE: ≥1 X 10^{-6} STD CC OF HELIUM/SEC.**
- **OUTGASSING: WE WILL CONTROL MATERIAL SELECTIONS AND CLEANLINESS TO MINIMIZE OUTGASSING.**

MOS PUMP DOWN CURVE

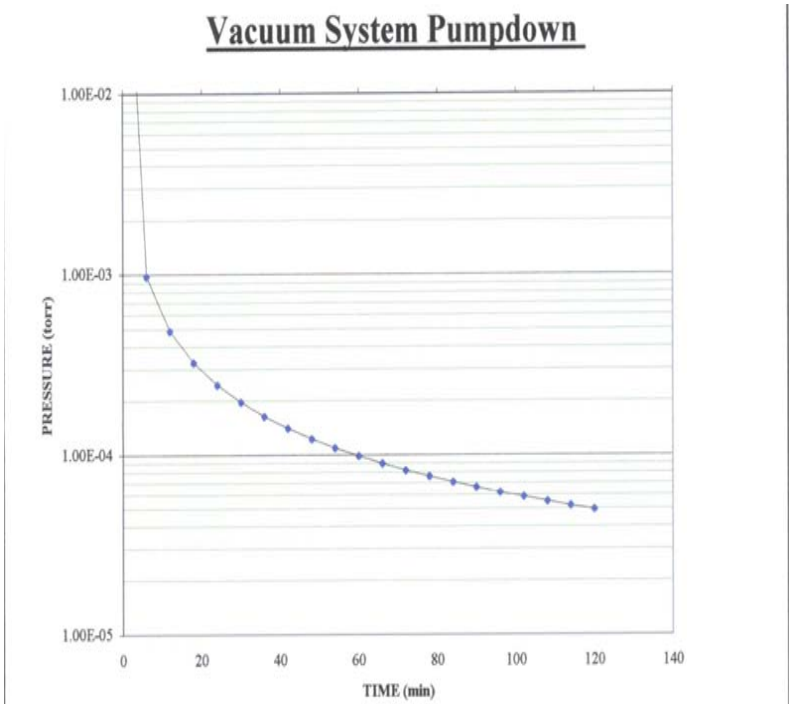

Input Results:

Chamber Volume	210	liters
Chamber Surface Area	1.31E+05	sq cm
Cross Over Pressure	350	microns
Diameter of Hi-Vac Port	6.68	cm
Conductance Limiters	Gate Valve	

- **PUMP DOWN CURVE PROVIDED BY DAVID McCARTHY OF VARIAN INC.**
- **INPUTS**
  - **CHAMBER SURFACE AREA SST (4060 IN-SQ.)**
  - **5 TIMES CHAMBER SURFACE AREA FOR ALUM.**
  - **384 INCHES OF VITON O'RING SEALS**
  - **CONDUCTANCE TO BELOW SLIT PLANE 262 L/S**
  - **COMBINE LEAK RATE OF 5 TIMES 10^{-7}**

CRYOSTAT PUMPDOWN CURVE

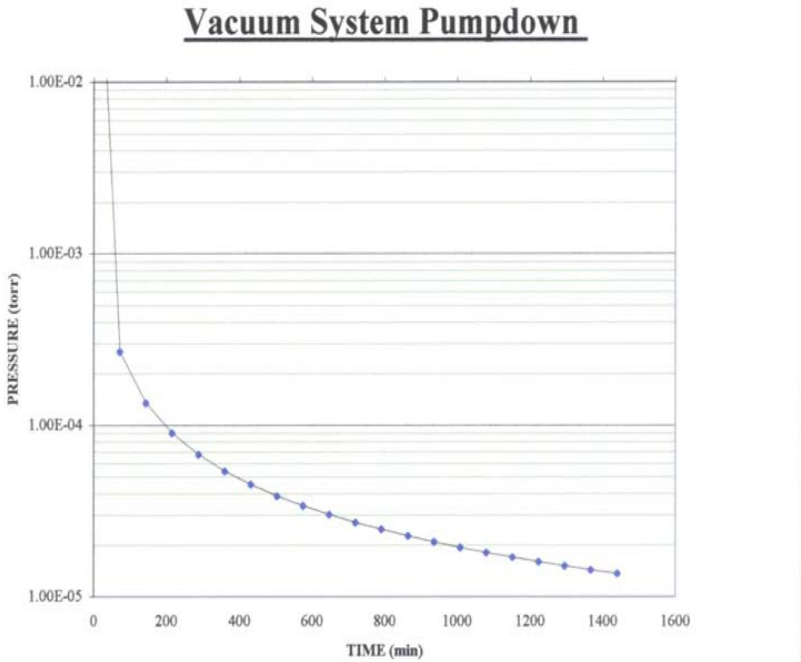

Input Results:		
Chamber Volume	760	liters
Chamber Surface Area	4.34E+05	sq cm
Cross Over Pressure	350	microns
Diameter of Hi-Vac Port	6.68	cm
Conductance Limiters	Gate Valve	

- **PUMP DOWN CURVE PROVIDED BY DAVID McCARTHY OF VARIAN, INC.**
- **INPUTS:**
  - **CHAMBER SURFACE AREA (9400 SQ-IN)**
  - **5 TIMES THE CHAMBER SURFACE AREA FOR ALUM.**
  - **180 INCHES OF O'RING SEALS**
  - **CONDUCTANCE OF ISOLATION VALVE 118 L/S**
  - **COMBINED LEAKAGE RATE OF 5×10^{-7}**

MMIRS TELESCOPE MOUNT

- **STEEL TUBULAR FRAME FOR MOUNTING ELECTRONICS WHICH PROVIDES INTERFACE TO INSTALLATION AND HANDLING FIXTURES**
- **CARBON FIBER TRUSS STRUCTURE FOR MOUNTING OF CRYOSTAT**
- **THE DESIGN PROVIDES INDEPENDENT LOAD PATHS FOR CRYOSTAT AND ELECTRONICS.**
- **THE LOADS FOR BOTH ARE COUPLED DIRECTLY TO THE TELESCOPE'S INSTRUMENT ROTATOR'S BOLT CIRCLE.**