Thermal Design and Analysis

Sang Park
Thermal Engineer

July 6th, 2004

Agenda

- Camera Section
  - Requirements
  - Thermal Design
  - Operational Profile (hold time, observation)
  - Optical Bench
  - Optical Assembly
  - Thermal Math Model
  - Cooling profile
  - Lens temperature profiles
- MOS Section
  - Thermal Design
  - Operational Profile (Transition time, Hold time)
- Planned Activities

Camera Section

Optical Assembly

Optical Assembly:

- Lens Temperature Gradient Requirements (degrees C):

	allowable temperature		
lens number	radial gradient	axial gradient	dimetral gradient
3	2.18	46.30	222.22
4	1.39	48.31	555.56
5	3.97	42.74	370.37
6	4.83	222.22	1111.11
7	92.59	2777.78	22222.22
8	2.78	42.74	555.56
9	2.58	44.44	370.37
10	3.58	113.38	1234.57
11	2.47	44.44	358.42
12	3.83	48.31	483.09
13	2.22	46.30	252.53
14	5.05	156.49	1221.00

Camera Section Thermal Features

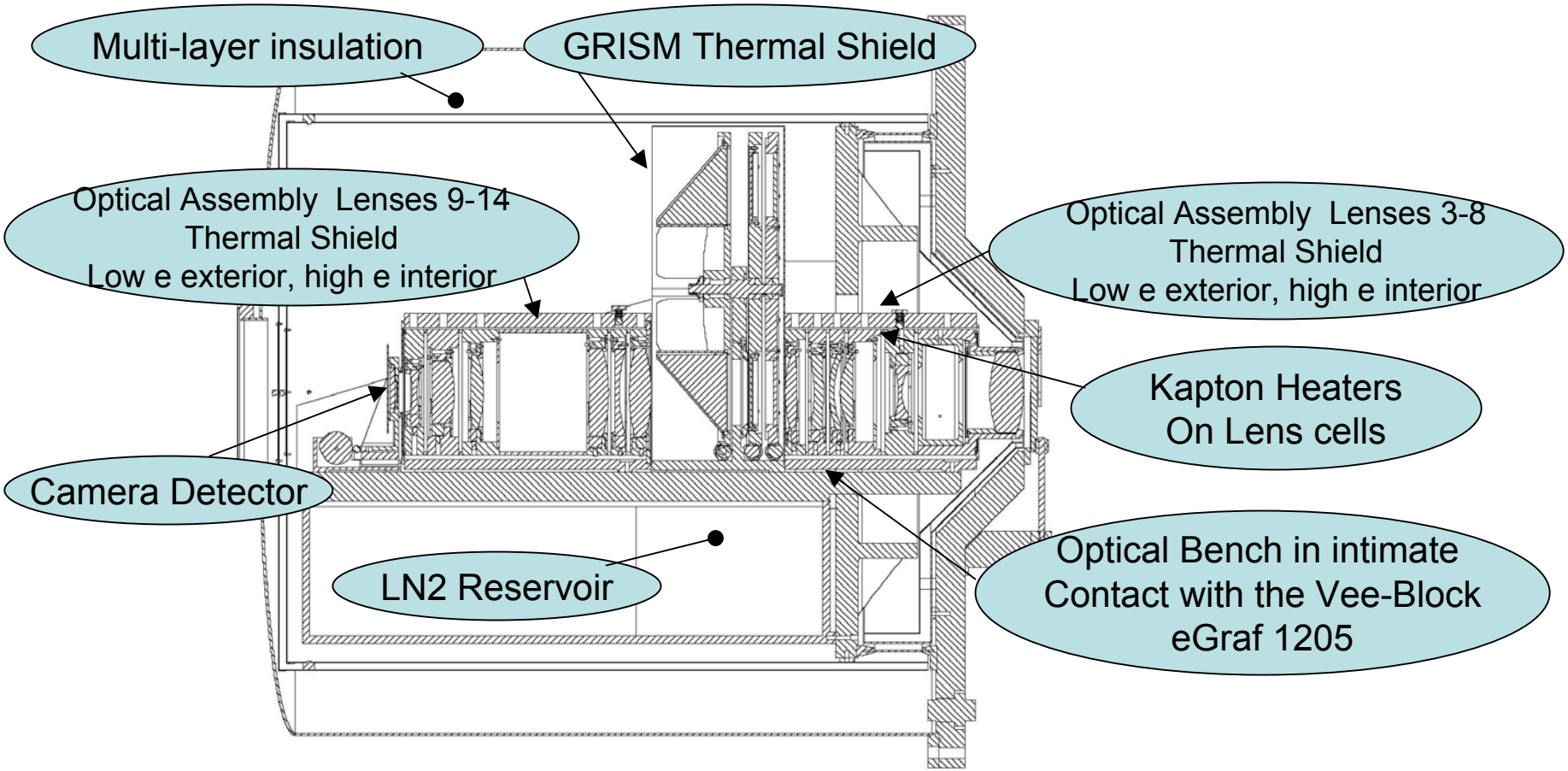

Optical Bench Thermal Design

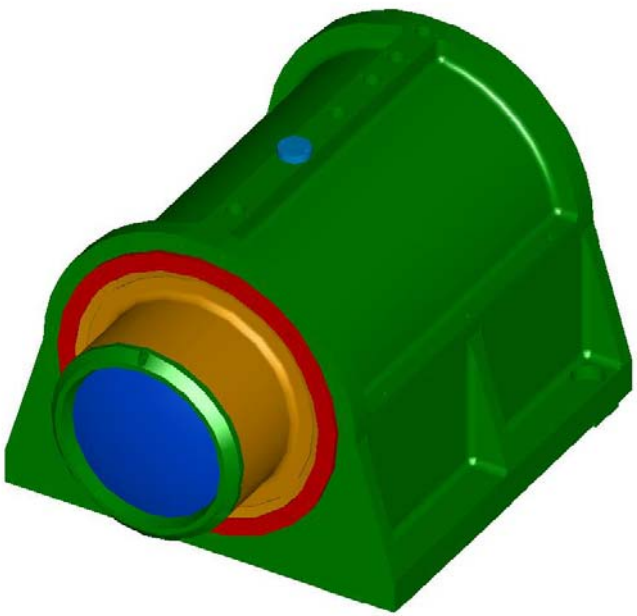

- 100w Heater power total
  - 2x 50w heater zones
  - Proportional heater controller
    CryoCon Model 34 (Baseline)
  - MINCO Kapton Heaters

- 12 temperature sensors
  - 8 sensors from the controller
  - 4 sensors from data logger

- Rate of cooling: Approximately 72 hours
  - Maintain less than 2 degree C gradient in lenses

Optical Bench Thermal Design

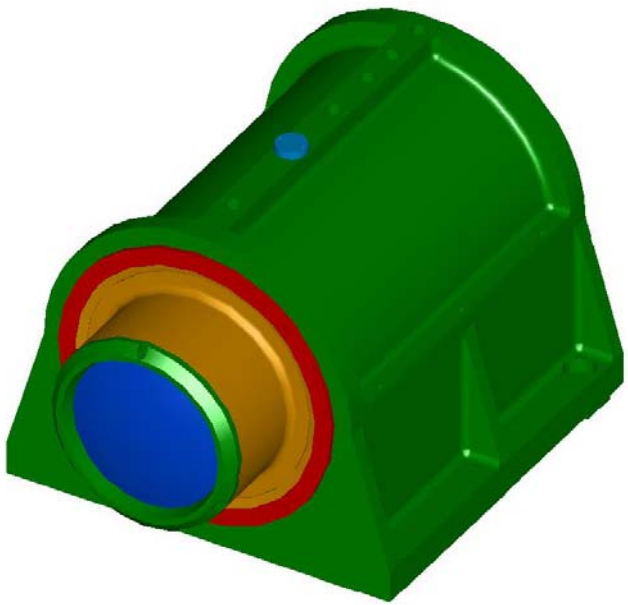

- Thermal Shroud, internal surface finished with black hard anodize
  - Emissivity=0.9
  - Thermal radiation dominant design

- Thermal Shroud, external surface finished with Low “e” tape (Aluminized Kapton, low outgas)
  - Emissivity= range 0.03 - 0.05

- Multi-layer Insulation (effective emissivity = 0.02 – 0.03) to cover internal surface of the most outer housing structure

- Intimate contact with the LN2 reservoir
  - GrafTech eGraf 1205 thermal interface material

Optical Bench Thermal Design

- Camera section Dewar has 100+ liters of LN2 capacity
  - Integrated vertical internal fins
    - Thermal path
    - Liquid baffles
  - Hold time: approximately 48 hours
    - Boil-off rate: .022 liter/hr-watt
    - Approximately 100w absorbed from the local ambient at 20C
    - Based on effective emmitance of 0.03 (multi-layer insulation)
  - Continuous supply of LN2 during the cool down period

Optical Assembly

Thermal Math Model :

Thermal Desktop/SINDA (Finite Difference Analyzer)

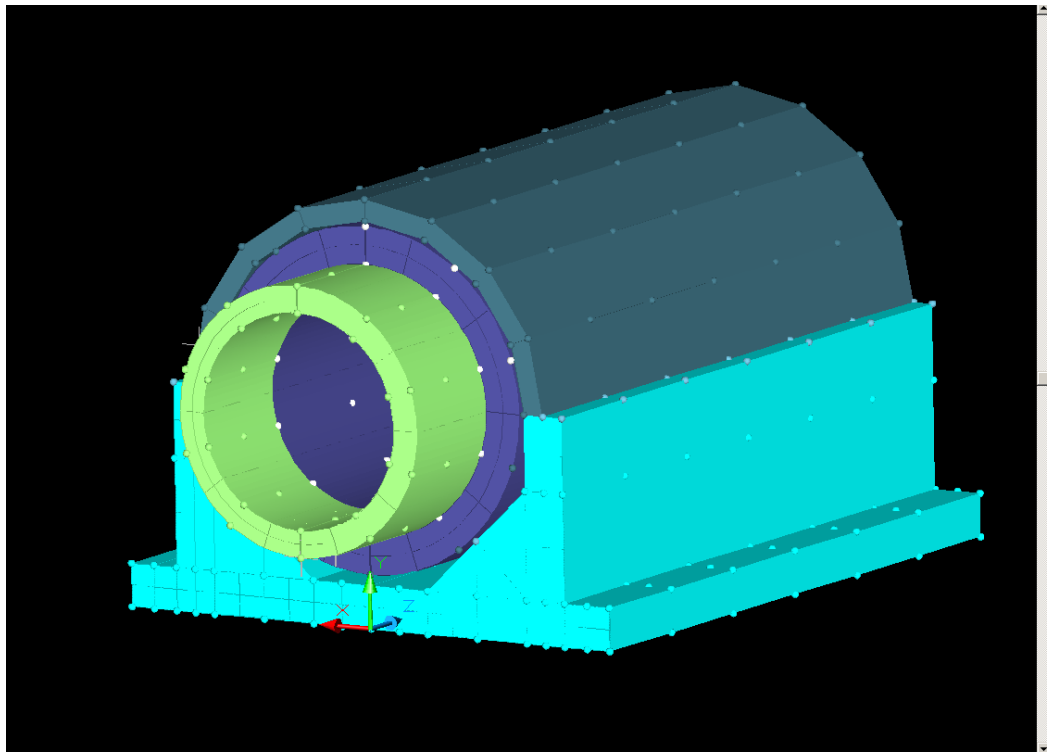

Optical Assembly

Results Thermal Math Model

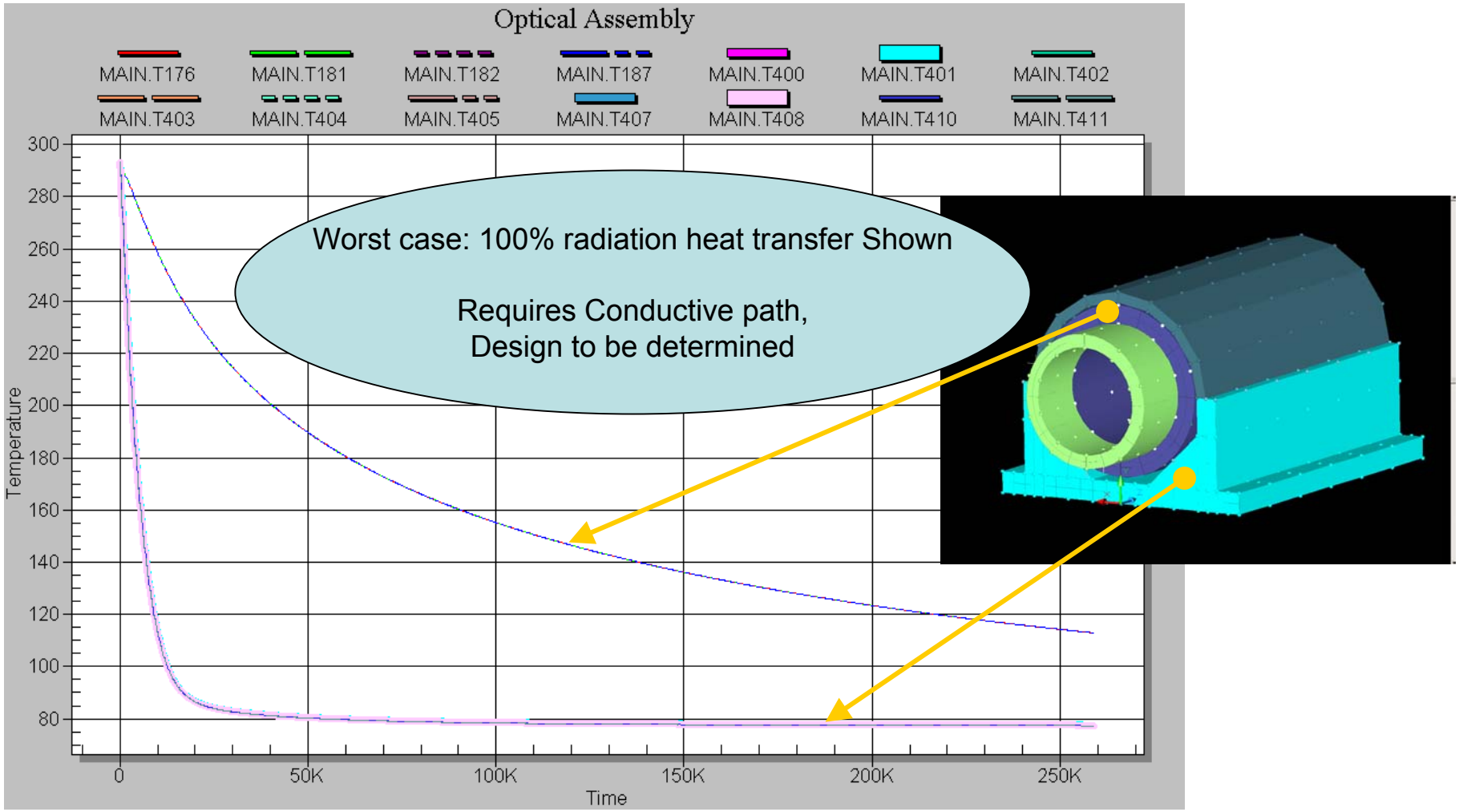

Thermal Properties

Description	Material	Thermal Conductivity			Specific Heat	Density
		K at Temperature (k)		Cp at Temperature (k)	J/kg-k	
Lens 3,4,8	CaF2		10 w/m-k 273k		0.204 cal/g-k	3.18 gm/cc
			9.71 w/m-k		888 J/Kg-k	3.18 gm/cc
			9.71 w/m-k		854 J/Kg-k	3.18 gm/cc
		88	61	85.32	280	3.18 gm/cc
		200	16.5	104.51	577	
		320	11.7	186	699	
				216.4	757	
				276	837	
				296.5	853	
Lens 5	BaF2	286	11.72 w/m-k		410 J/Kg-k	4.89 gm/cc
		286	11.7 w/m-k	274	.096 cal/gm-k	
		311	7.1 w/m-k		0.456e3 J/Kg-C	4.89 gm/cc at 20C
Lens 6	ZnSe	298	18 w/m-k		339 J/Kg-k	5.27 gm/cc
		300	18 w/m-k	296	0.081 cal/gm-k	5.27 gm/cc
Lens 7	Fused Qtz		2 w/m-k			2.21e3 kg/m-3
		283	1.46 w/m-k	298	670-740 J/kg-k	2.2 gm/cc
					J/kg-k	
		23	0.56	73	218.18	
		148	1.12	193	400	
		273	1.44	393	800	
		344	1.6			

Thermal Properties

eGraf™ 1200 Thermal Resistance vs. Pressure

Graftech Inc. teamed with a leading university to measure the specific thermal resistance of eGraf 1200 Series Thermal Interface Material versus pressure. The results of these tests are shown in the graph below.

Testing parameters:

- Test Method: ASTM D5470 modified
- Test range: 10 to 100 Psi
- Out of Flatness of test blocks: < 0.000015 inches out of flat

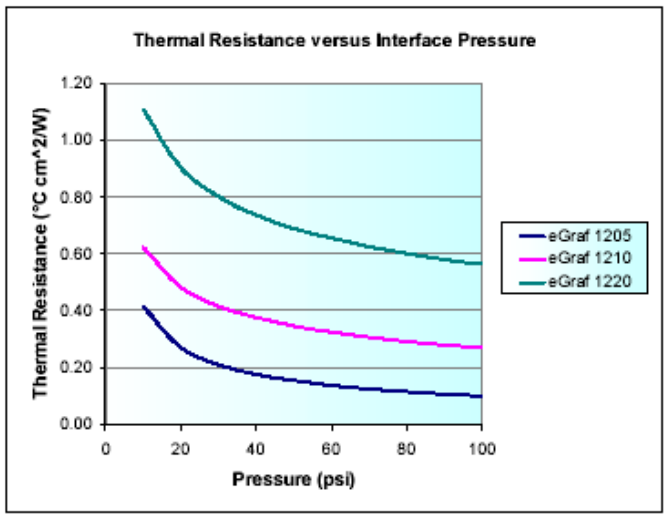

GrafTech eGraf 1205 as a thermal interface material between the Optical assembly/Optical bench and MOS Dewar/the wheel support plate

Optics Thermal Math Models

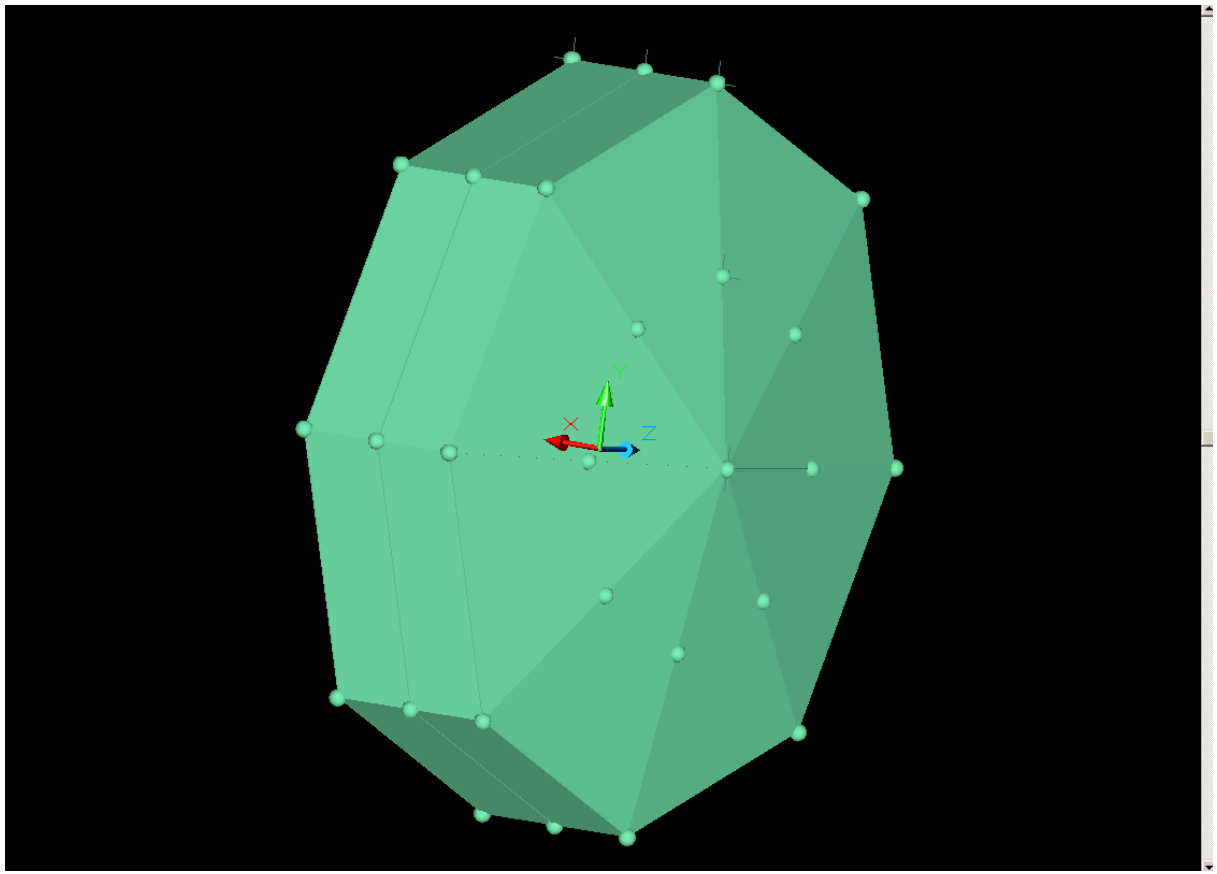

Lens #3 CaF2

Optics Thermal Math Models

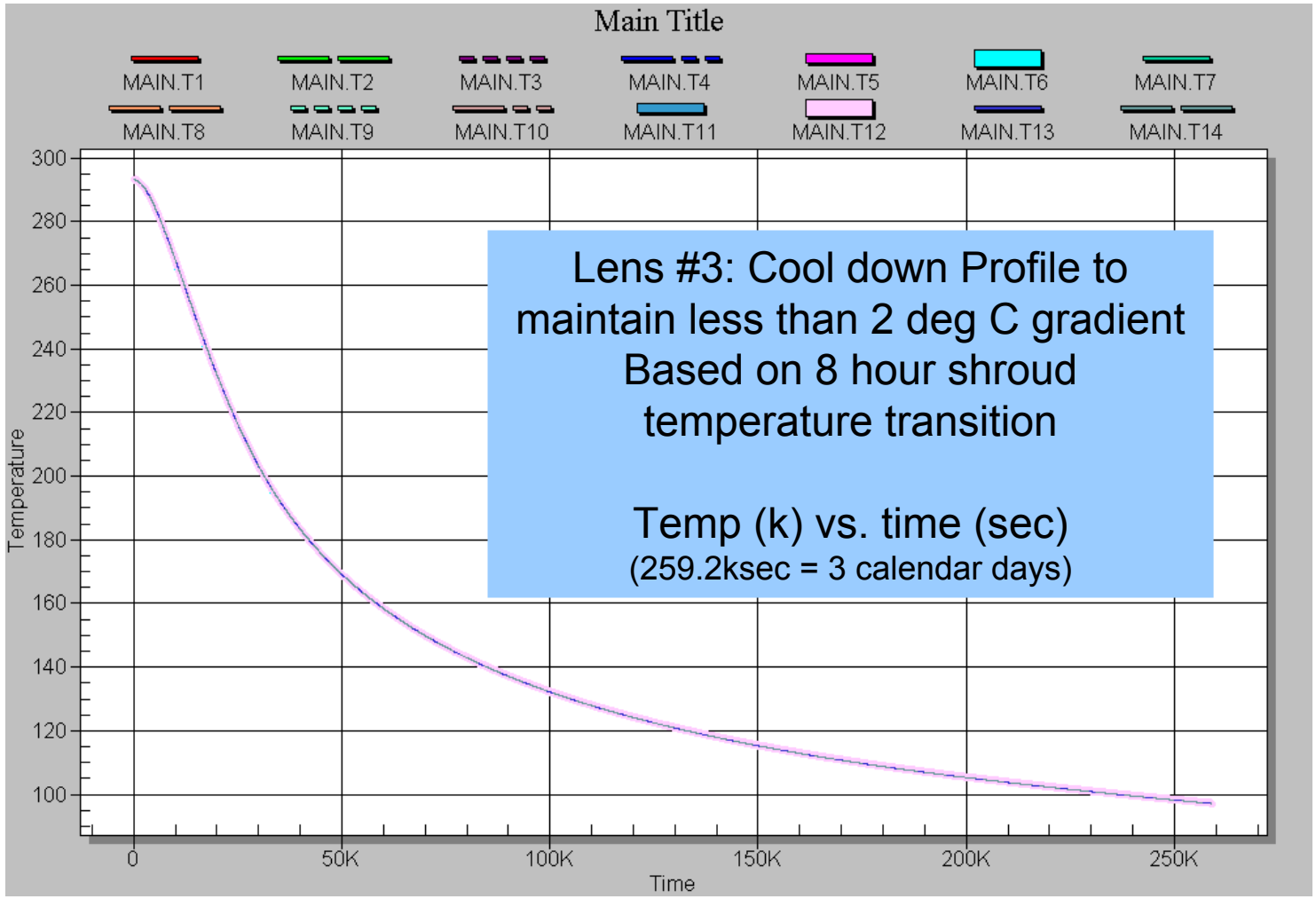

Optics Thermal Math Models

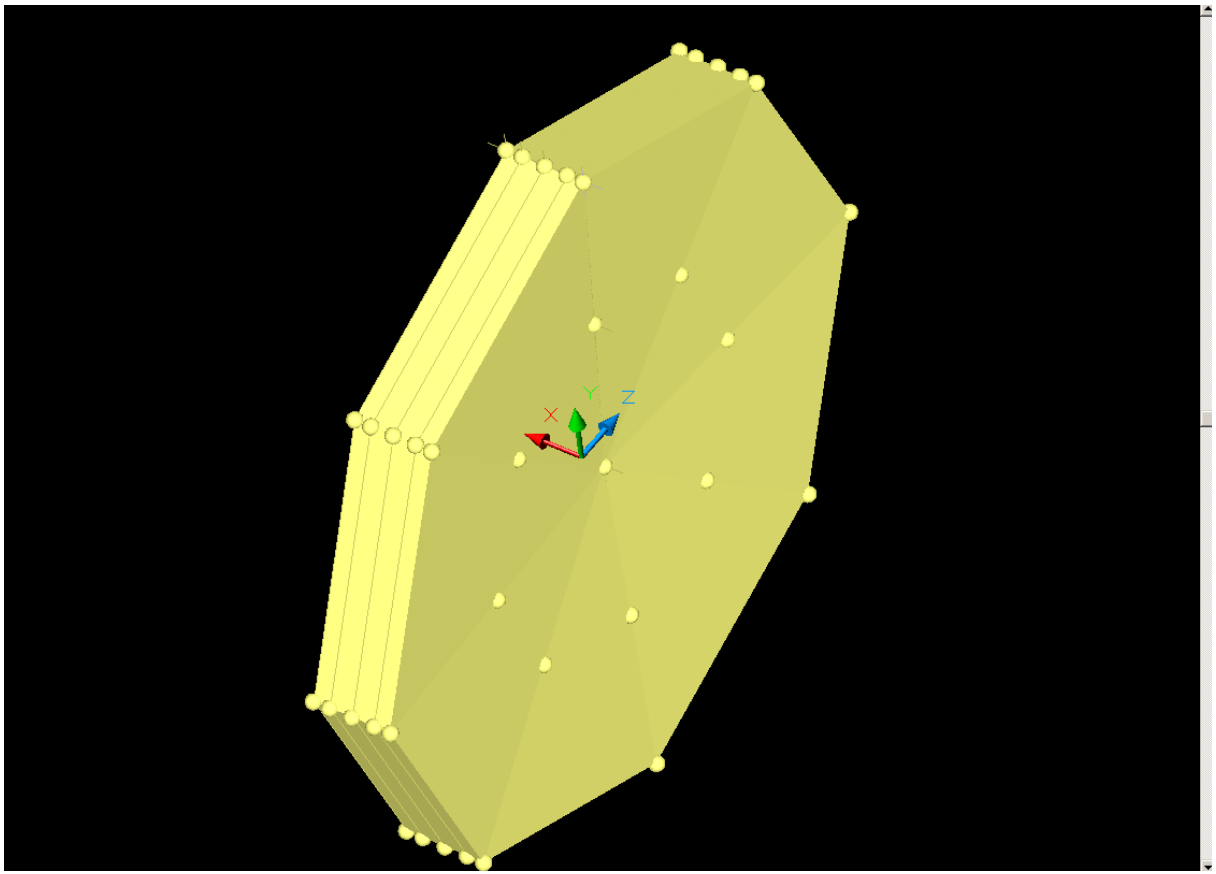

Lens #4 CaF2

Optics Thermal Math Models

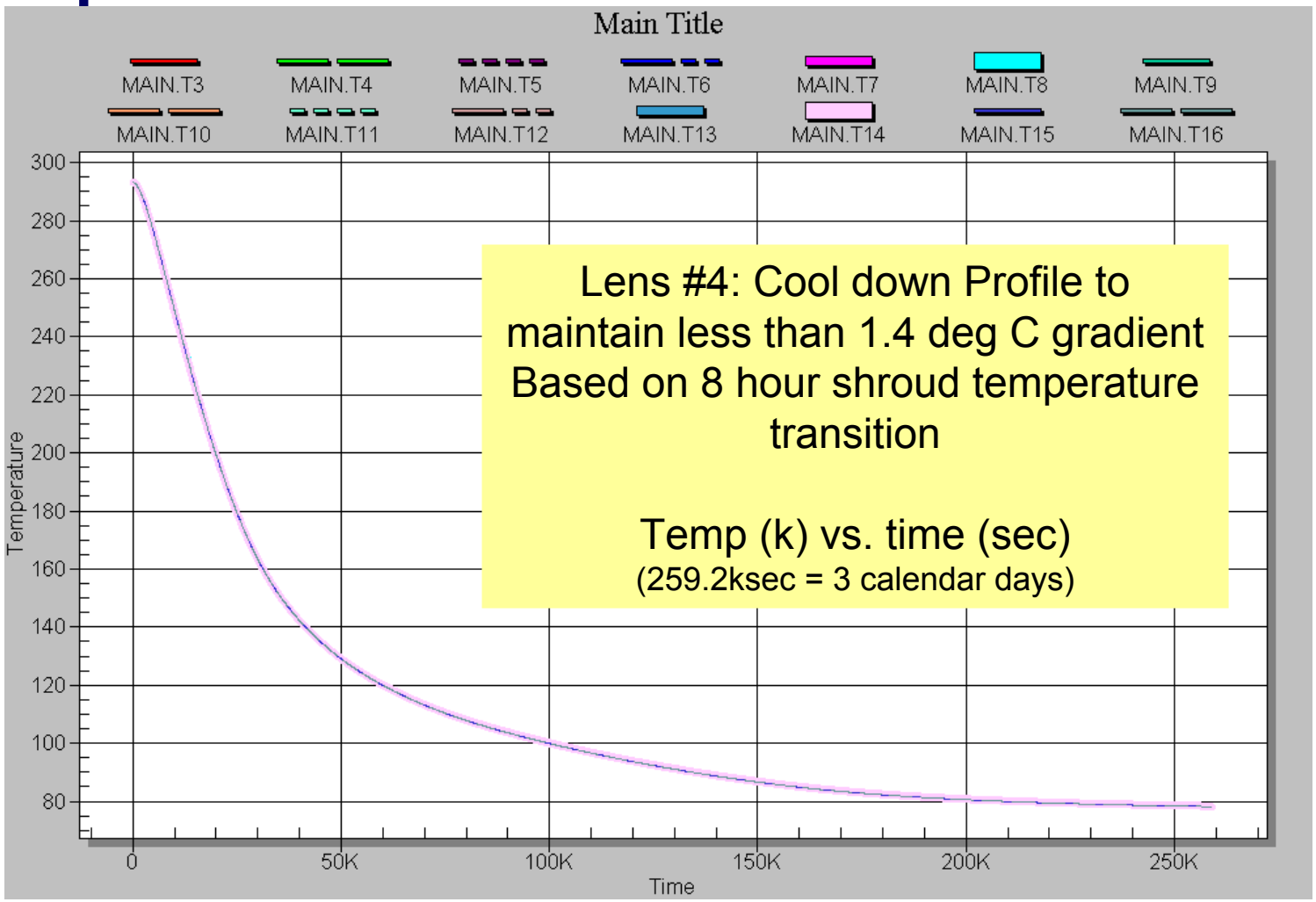

Lens #4: Cool down Profile to maintain less than 1.4 deg C gradient Based on 8 hour shroud temperature transition

Temp (k) vs. time (sec)
(259.2ksec = 3 calendar days)

Optics Thermal Math Models

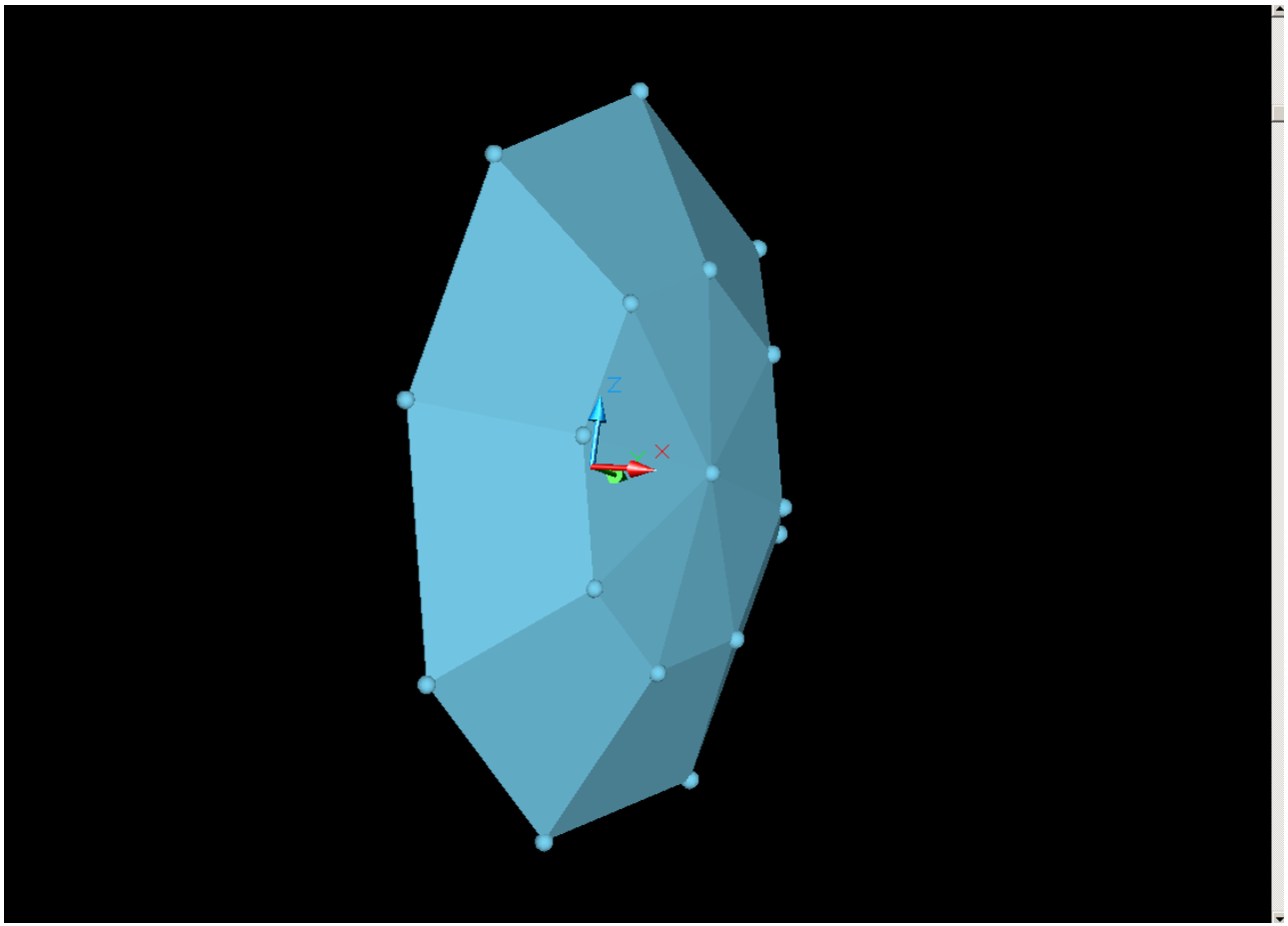

Lens #5 BaF2

Optics Thermal Math Models

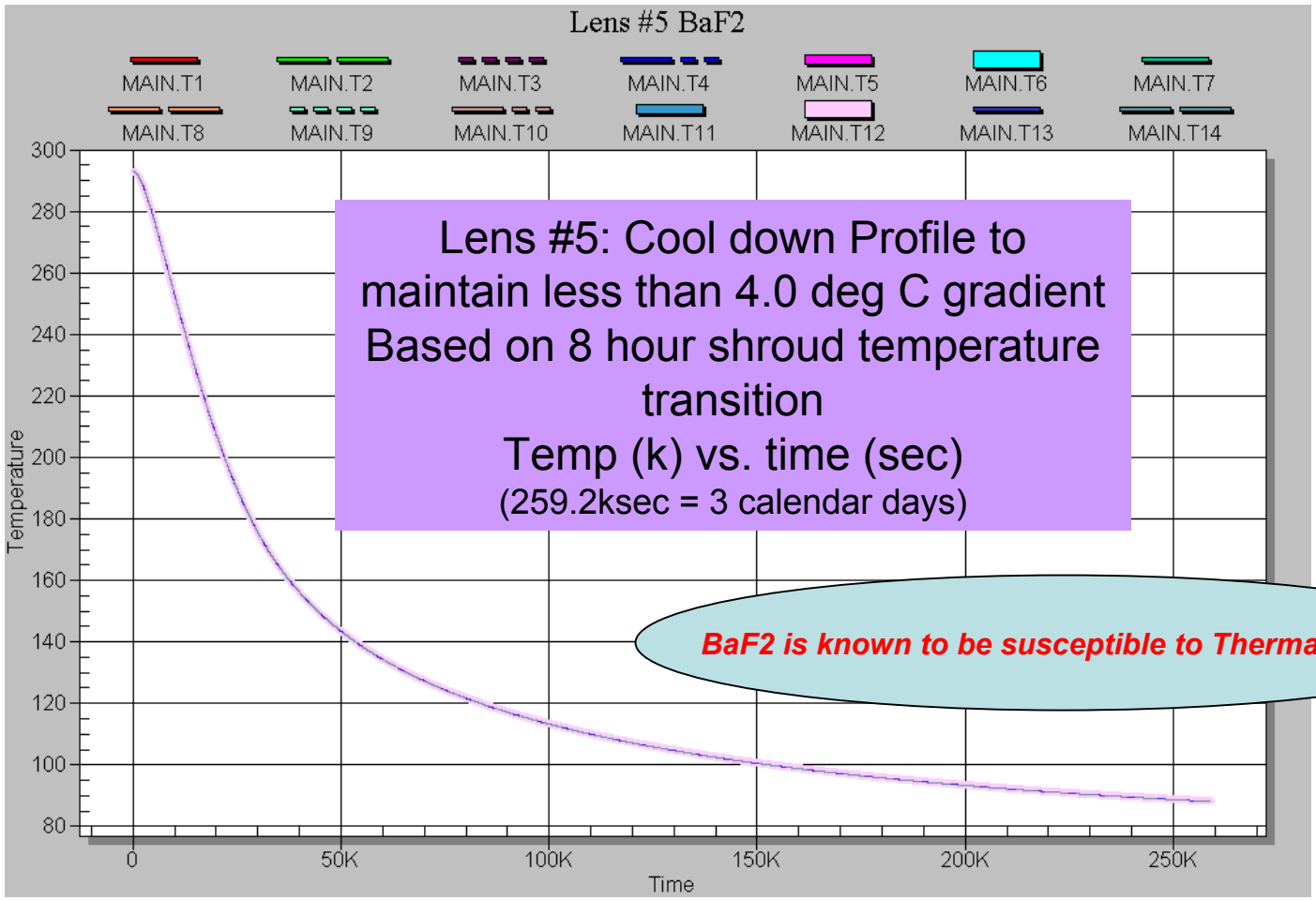

Lens #5: Cool down Profile to maintain less than 4.0 deg C gradient
Based on 8 hour shroud temperature transition
Temp (k) vs. time (sec)
(259.2ksec = 3 calendar days)

BaF2 is known to be susceptible to Thermal Shock

Optics Thermal Math Models

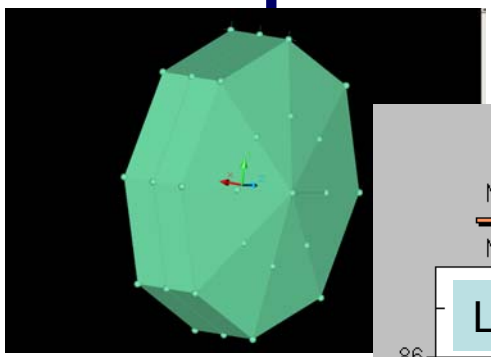

Lens #3 CaF2

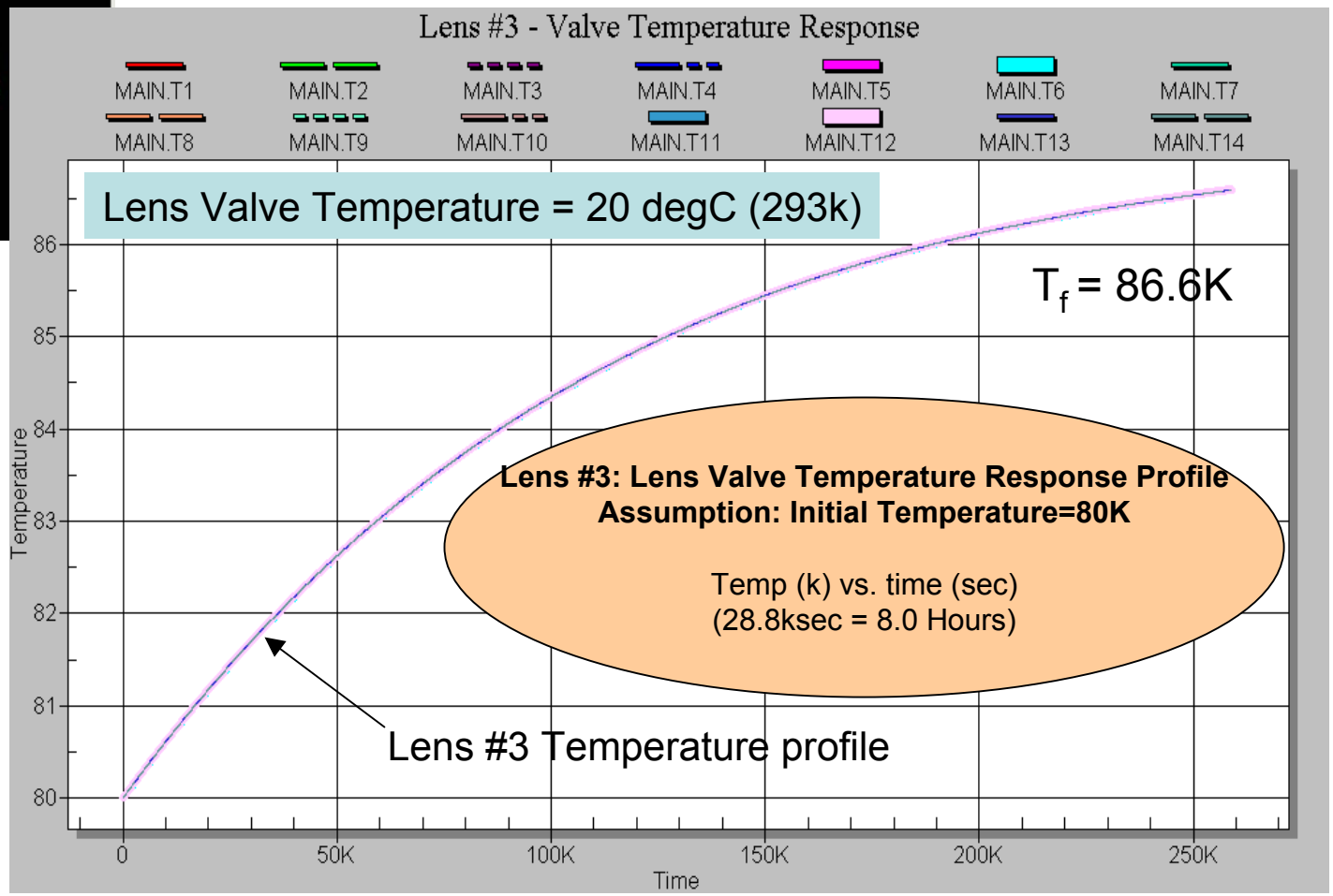

MOS Section

MOS Section

- MOS Section has 45+ liters of LN2 capacity
  - Integrated internal fins
    - Thermal path
    - Liquid baffles
  - Hold time: approximately 40 hours at Max capacity
    - Potentially only 15 liters may be filled based on a fill orientation
      - Approximately 13 hours hold-time (horizon pointing, fill-tube at bottom)
    - Boil-off rate: 0.022 liter/hr-watt
    - Approximately 50w absorbed from the local ambient at 20C
    - Based on effective emittance of 0.03 (Thermal shields plus Multi-layer insulations)
  - Continuous supply of LN2 during the cool down period

MOS Section Thermal Design

- Surface finishes
  - Internal to thermal shield: Black Anodize finishes
  - External to the thermal shield: Low “e” tape (Aluminized Kapton, low outgas)
- Thermal shield locations
- Dewar location

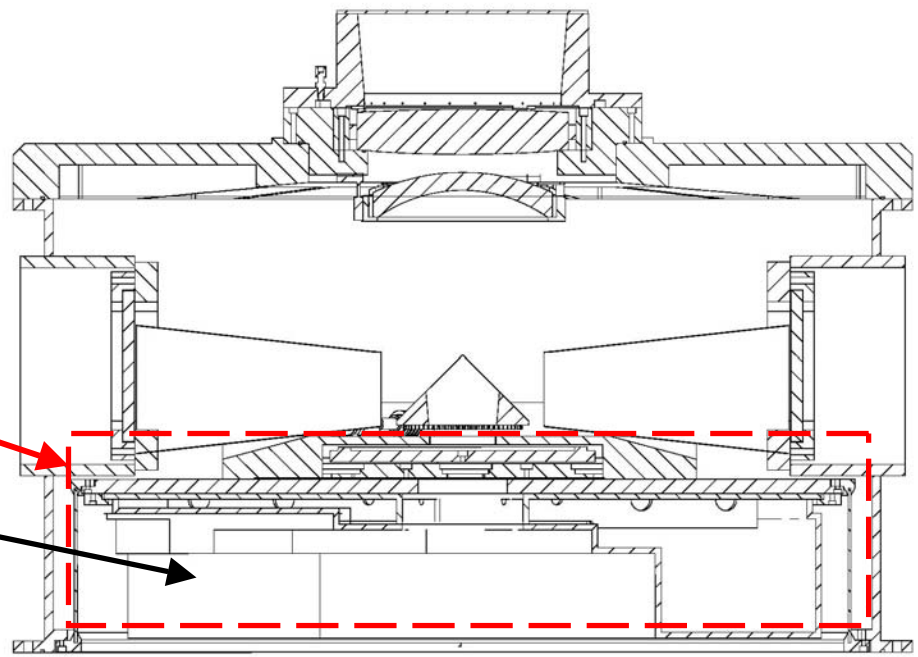

- 4 temperature sensors
  - 4 sensors from data logger

MOS Section

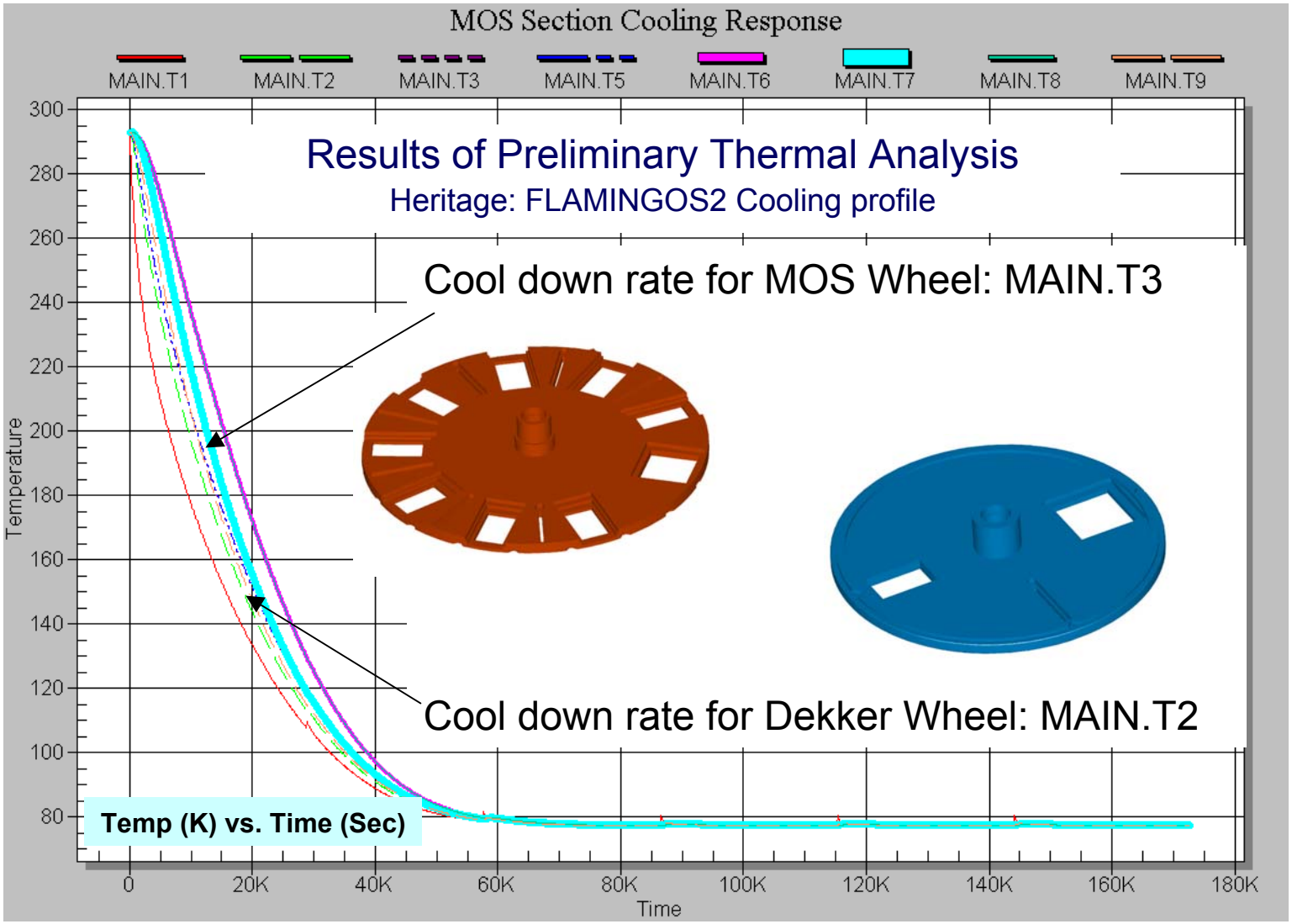
MOS Section Cooling Response
MAIN.T1
MAIN.T2
MAIN.T3
MAIN.T5
MAIN.T6
MAIN.T7
MAIN.T8
MAIN.T9
Results of Preliminary Thermal Analysis
Heritage: FLAMINGOS2 Cooling profile
Cool down rate for MOS Wheel: MAIN.T3
Cool down rate for Dekker Wheel: MAIN.T2
Temp (K) vs. Time (Sec)
Temperature
300
280
260
240
220
200
180
160
140
120
100
80
0
20K
40K
60K
80K
100K
120K
140K
160K
180K
Time

Planned activities

- Camera Section
  - Analyze Detector Assembly
  - Improve transition time to cool down
  - Generate detailed thermal math model (TMM)
    - Analyze individual lens thermal performances
    - Grism wheel thermal profiles
  - Characterize thermal interaction between the camera and MOS sections

- MOS Section
  - Improve transition time to cool down
  - Design thermal shield
  - Determine temperature stability due to the environmental conditions

- Integrated Thermal-Stress Model

- Specify and order thermal related components (heater, MLI materials, surface finishes/tapes etc.)